ASSEMBLY INSTRUCTION

Ax1		Bx4	
Cx1 5#	Dx4 8x20	Ex16 8x16	Fx20 8x18
Gx1			

1

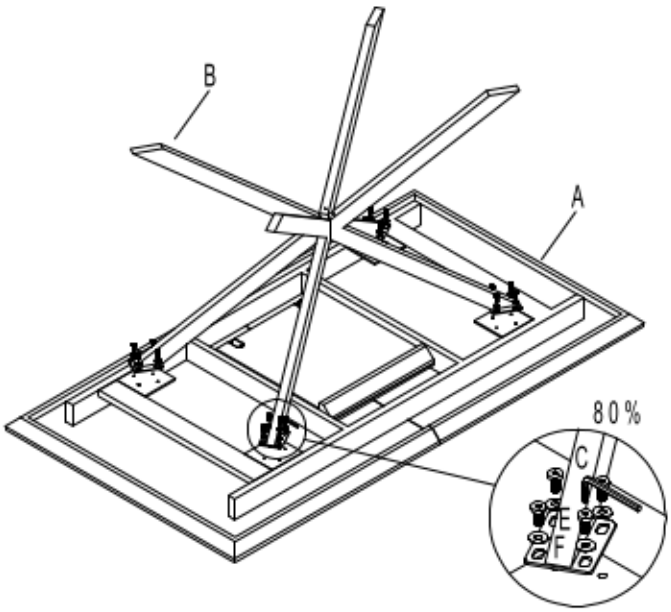

2

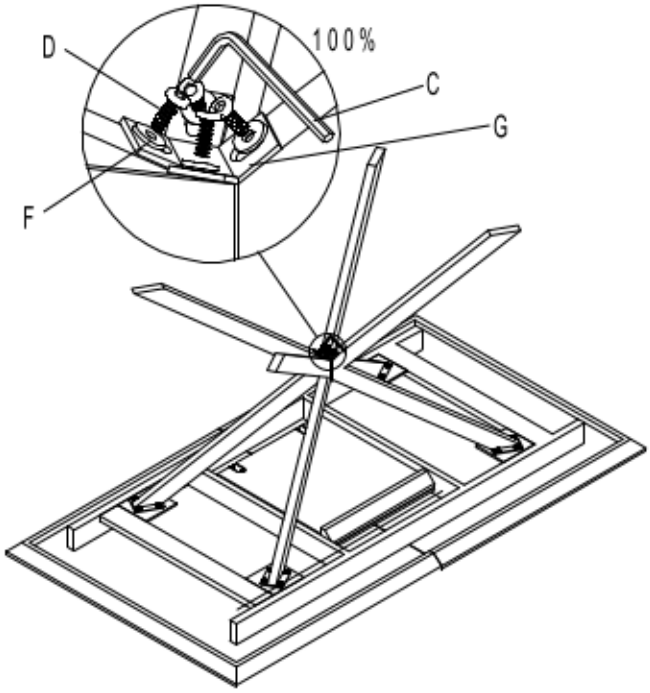
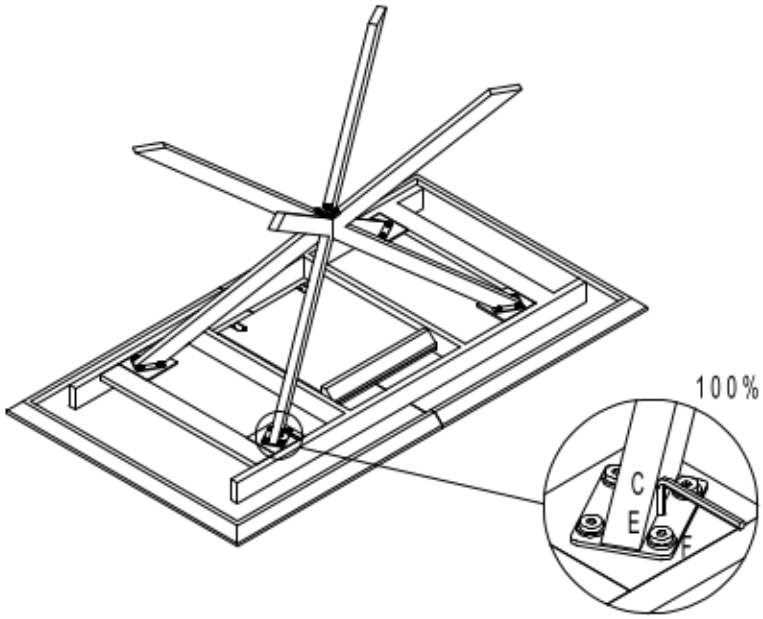
3