D60 P/L

v.2

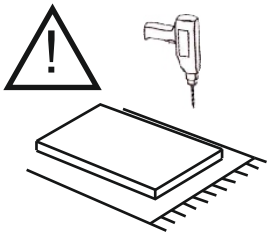

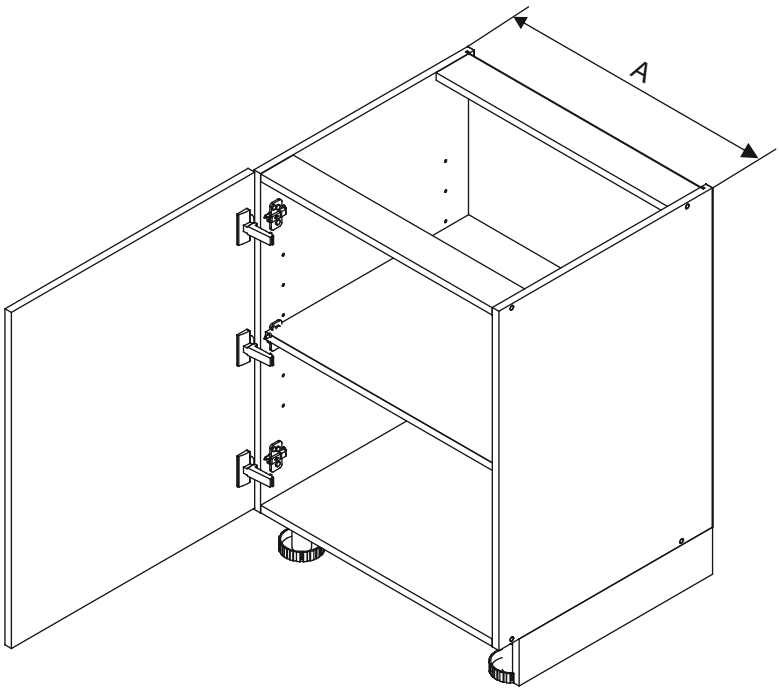

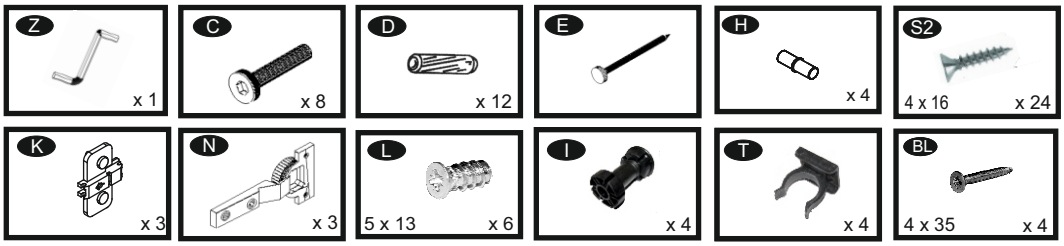

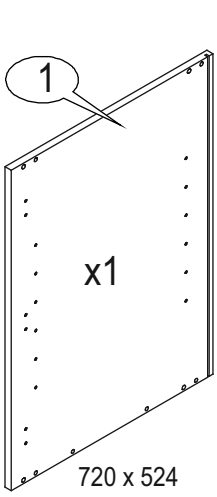

720 x 524

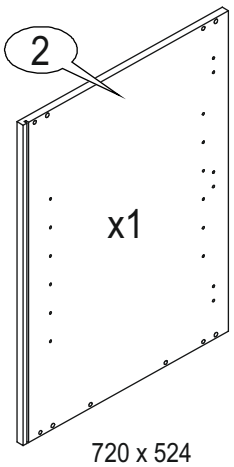

720 x 524

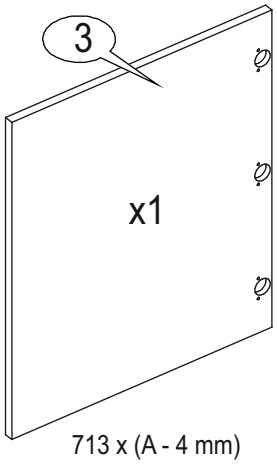

713 x (A - 4 mm)

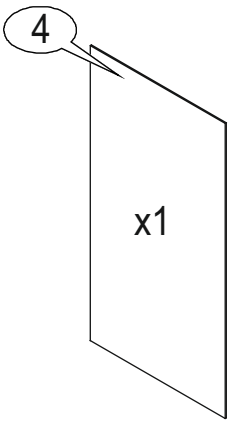

716 x (A - 22 mm)

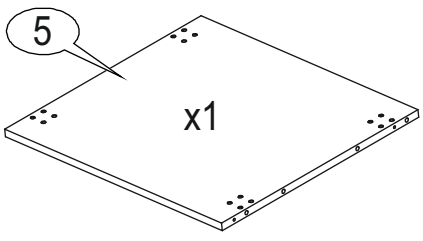

510 x (A - 33 mm)

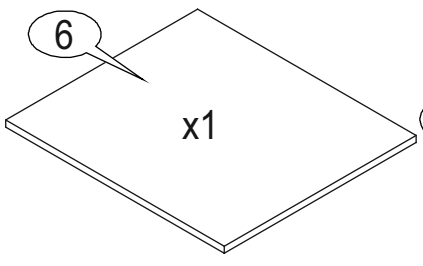

498 x (A - 33 mm)

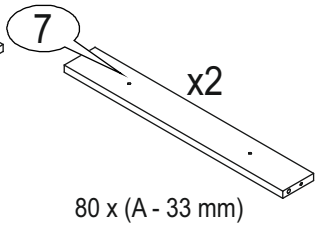

80 x (A - 33 mm)

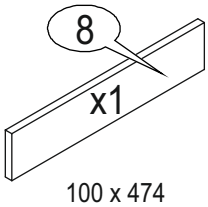

100 x 474

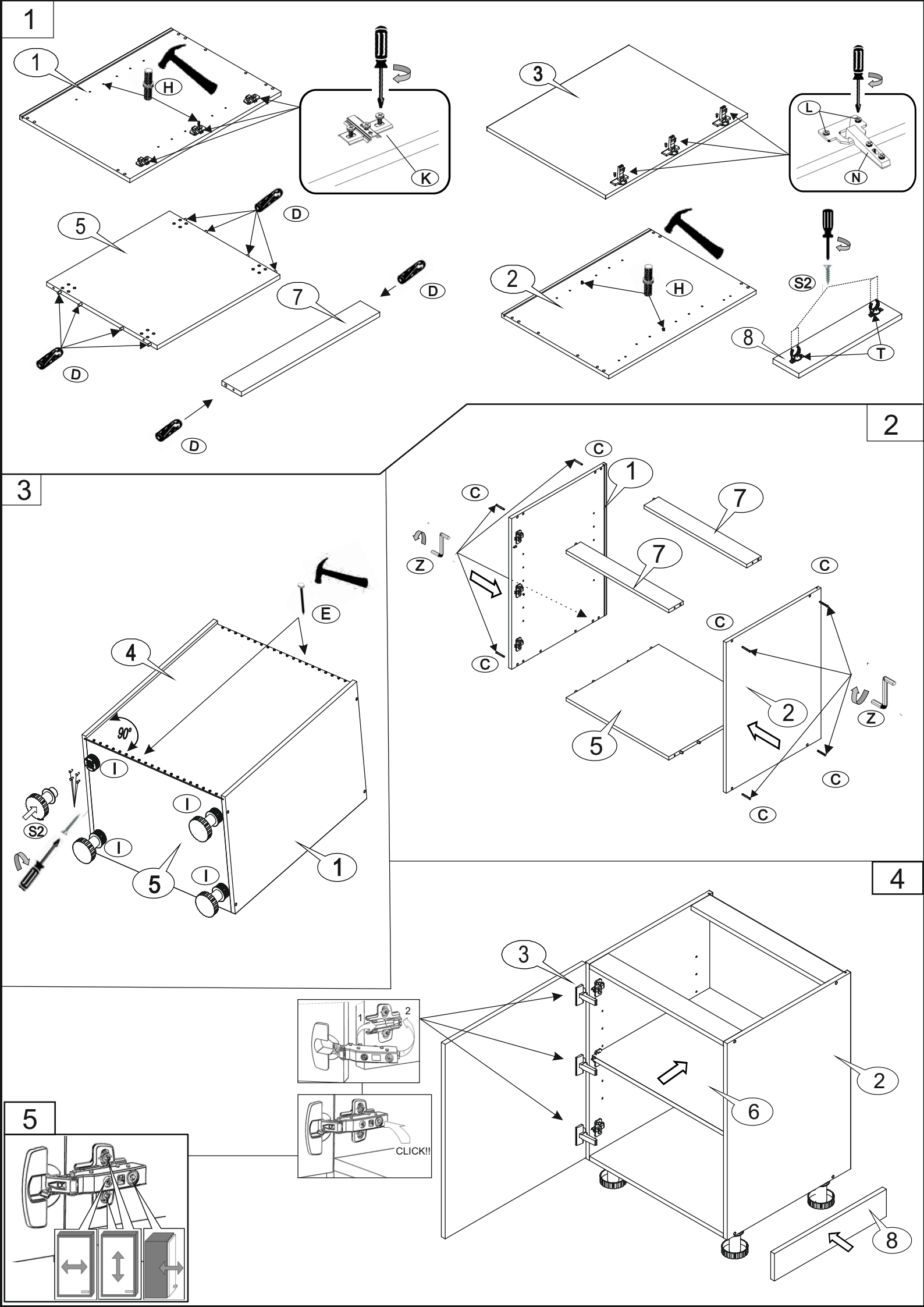
1
1
H
K
3
L
N
5
D
D
7
D
D
2
H
S2
8
T
2
C
1
C
7
Z
7
C
C
C
5
2
Z
C
C
3
E
4
90°
I
I
I
I
S2
5
1
4
3
1
2
CLICK!!
6
2
8
5

D50ZL P/L, D60ZL P/L

v.2

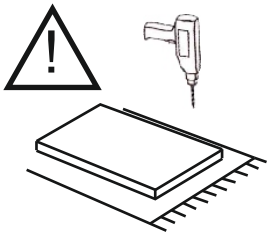

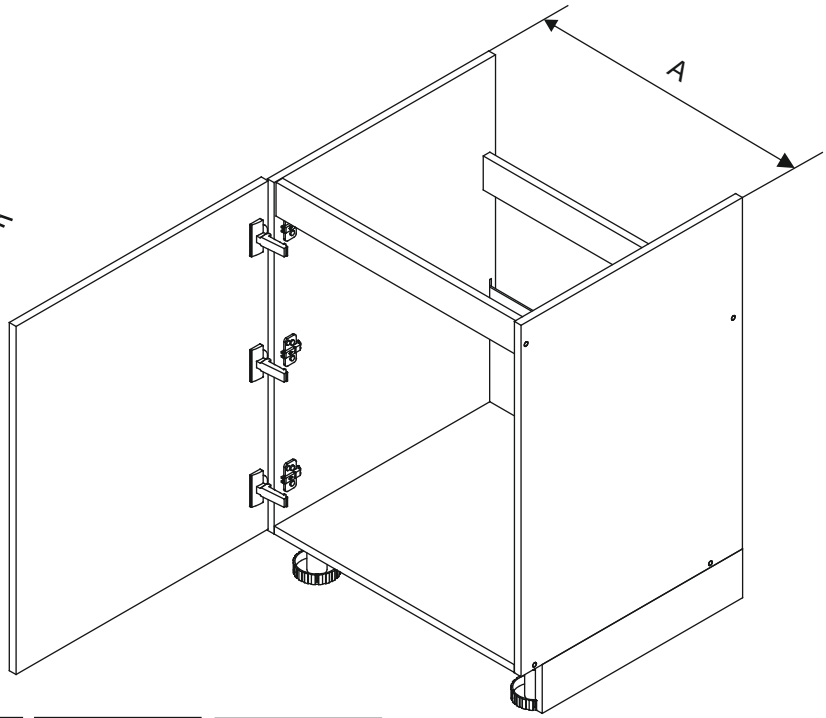

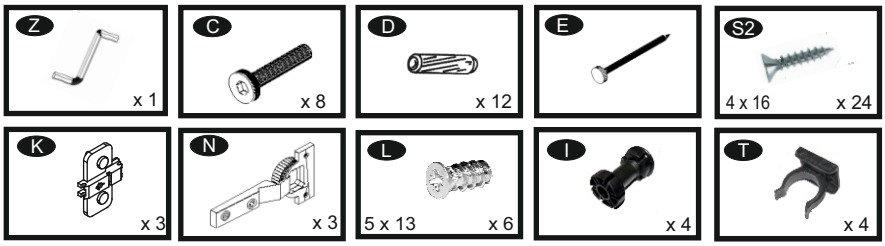

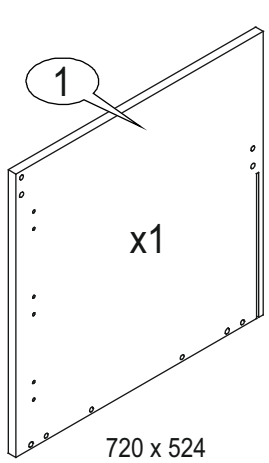

720 x 524

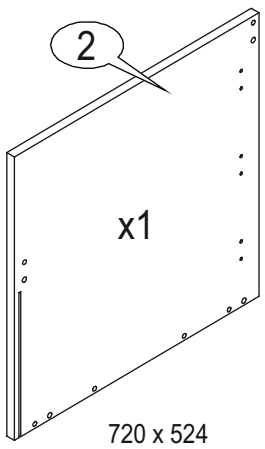

720 x 524

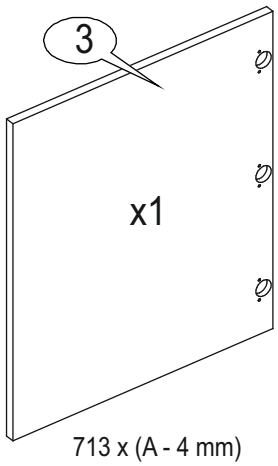

713 x (A - 4 mm)

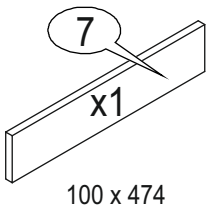

100 x 474

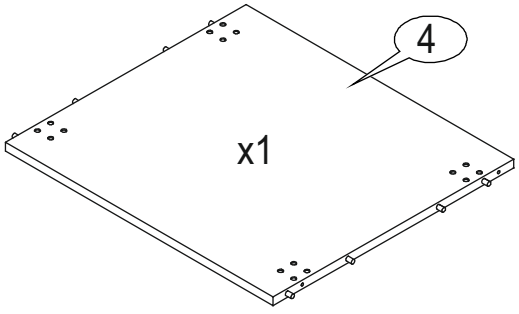

510 x (A - 33 mm)

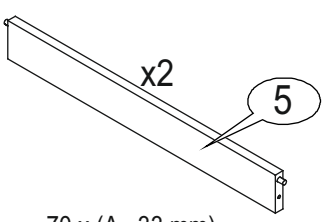

70 x (A - 33 mm)

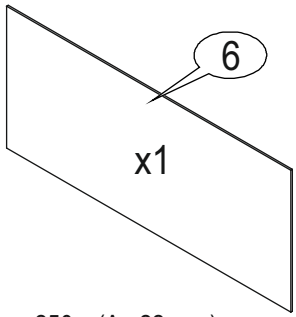

250 x (A - 22 mm)

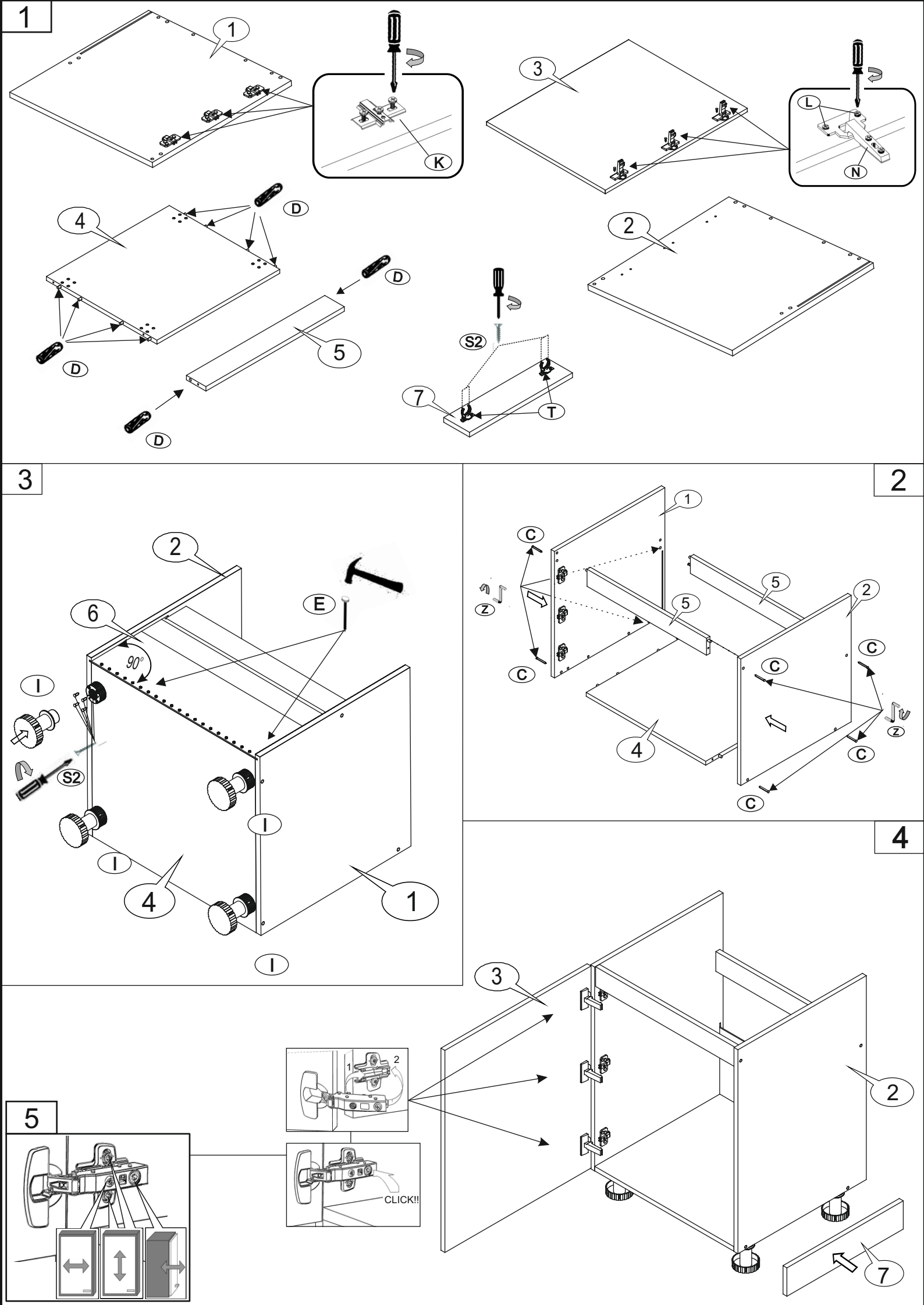
1
1
K
3
L
N
4
D
D
D
D
5
2
S2
7
T
3
2
6
E
90°
I
S2
I
I
I
4
1
2
1
C
Z
5
5
2
C
C
C
C
C
Z
4
4
3
2
1
2
CLICK!!
5
7

TL - ALTO: D30 S/3; D40 S/3; D45 S/3; D50 S/3; D60 S/3

v.3

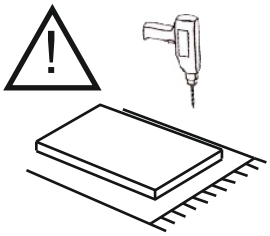

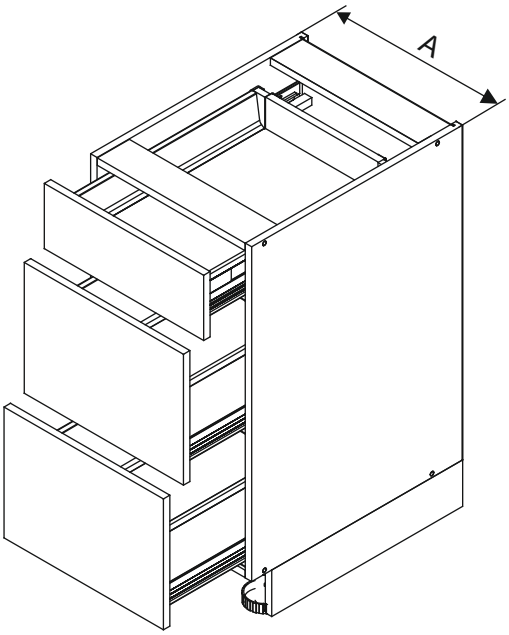

SM SD

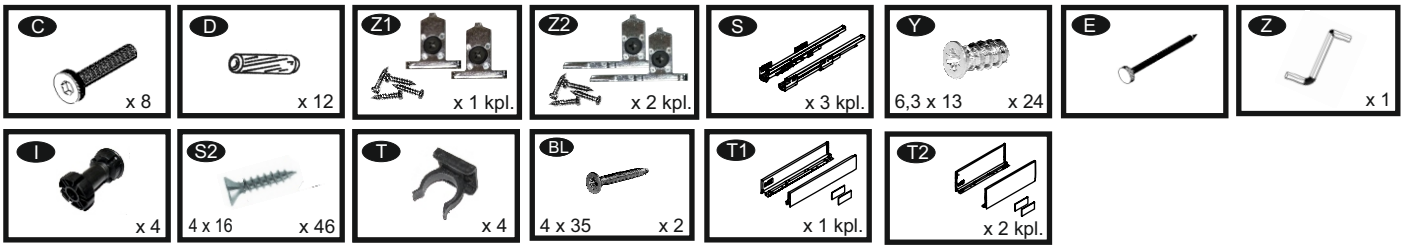

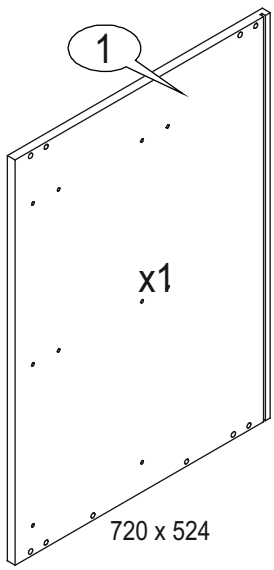

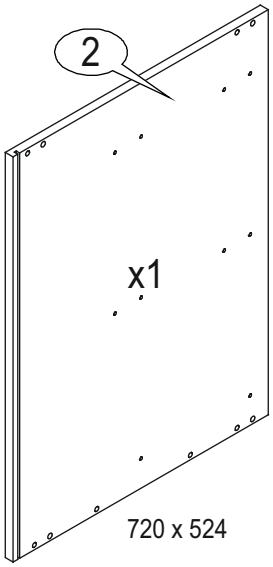

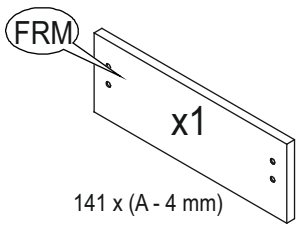

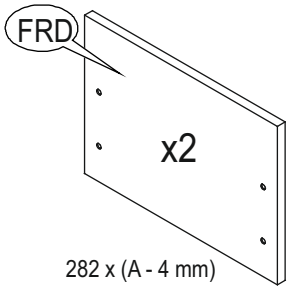

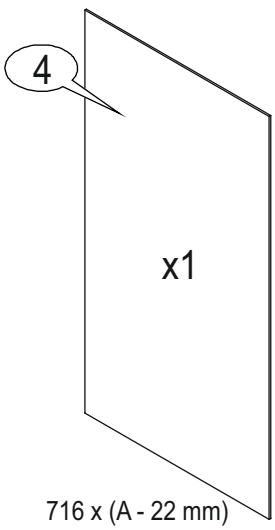

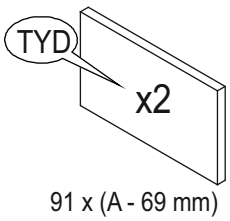

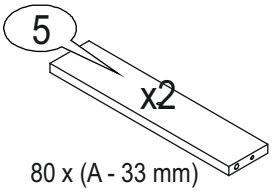

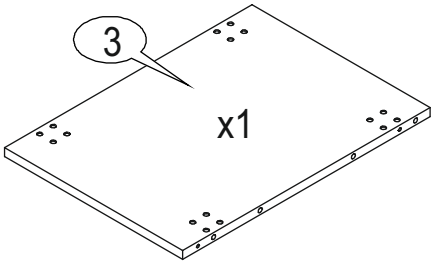

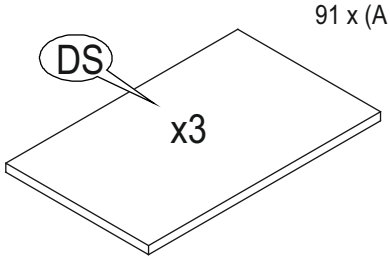

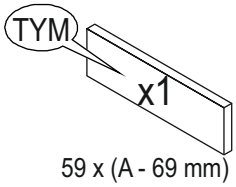

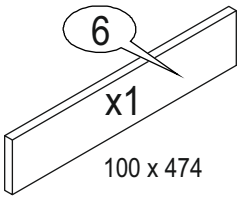

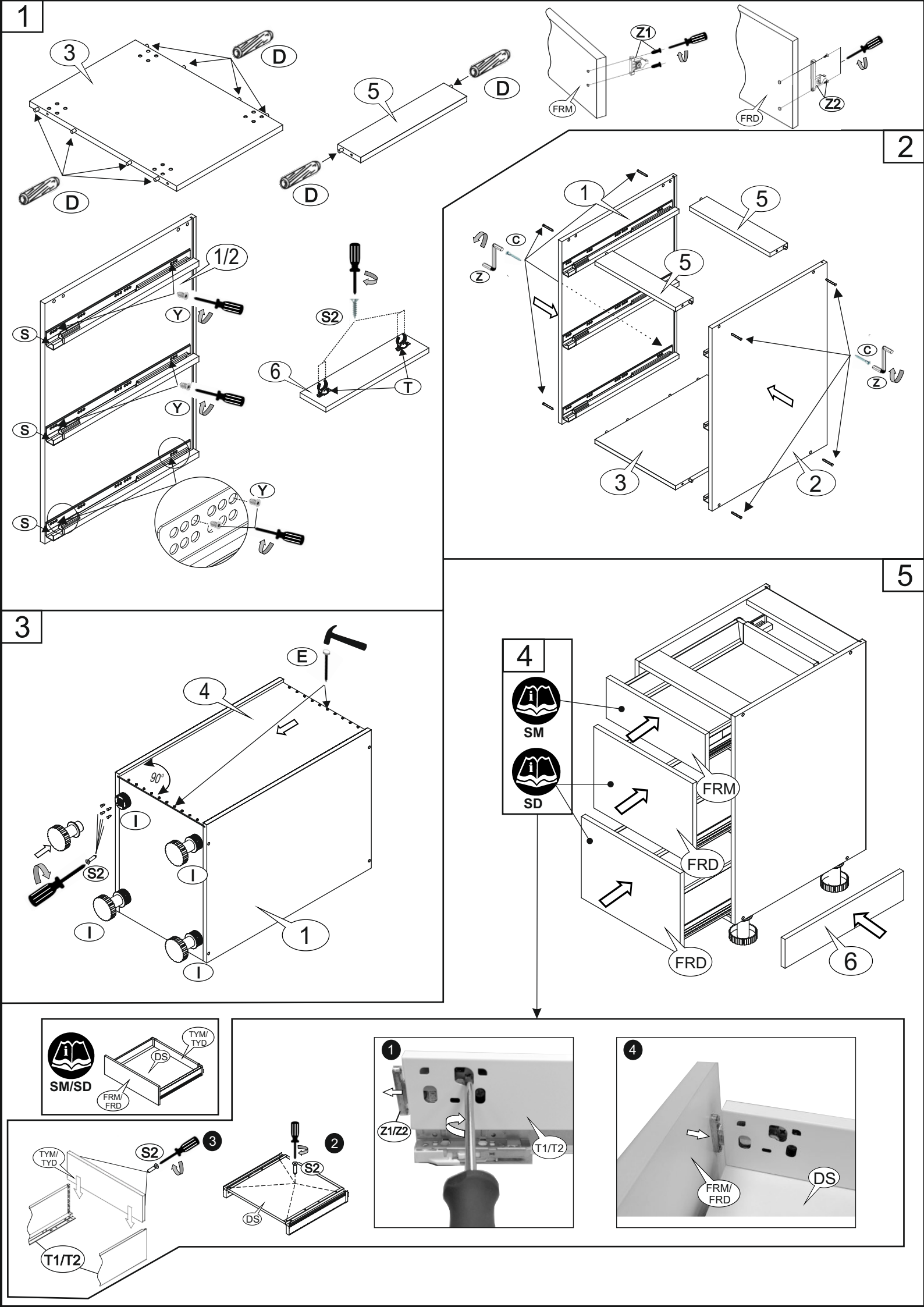
1
3
D
D
5
D
D
Z1
FRM
FRD
Z2
2
1
5
C
Z
5
C
Z
3
2
1/2
Y
S
Y
S
Y
S
S2
6
T
3
E
4
90°
I
I
I
I
S2
1
4
SM
SD
FRM
FRD
FRD
6
5
SM/SD
TYM/
TYD
DS
FRM/
FRD
1
Z1/Z2
T1/T2
4
FRM/
FRD
DS
3
S2
TYM/
TYD
T1/T2
2
S2
DS

D60PC P/L

v.3

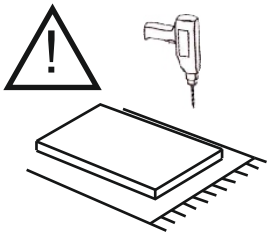

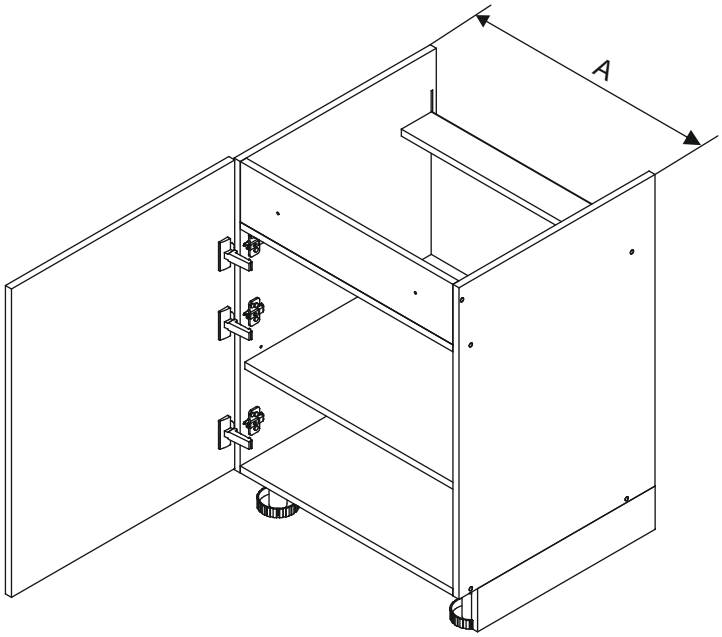

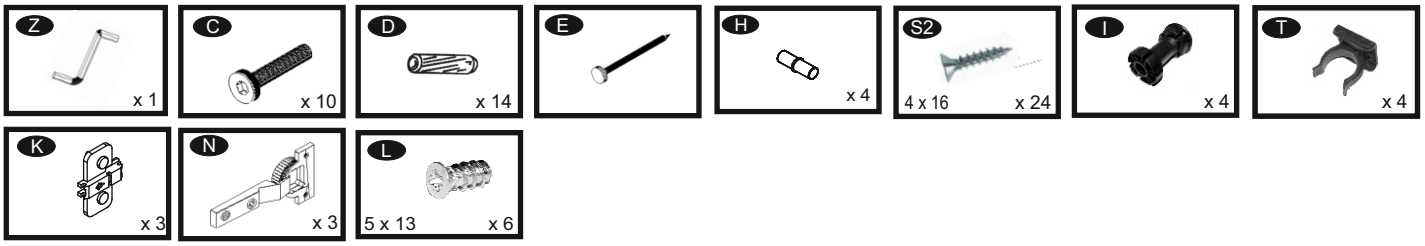

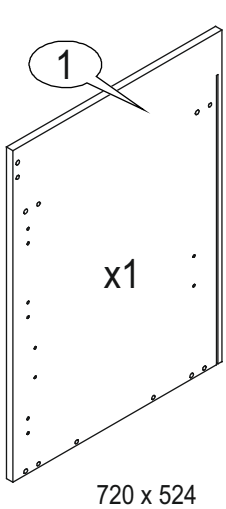

720 x 524

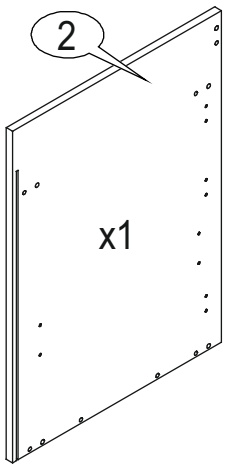

720 x 524

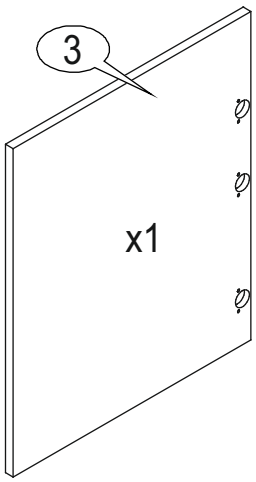

713 x (A - 4 mm)

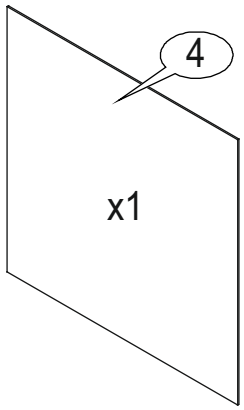

576 x (A - 22 mm)

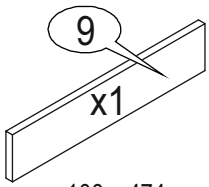

100 x 474

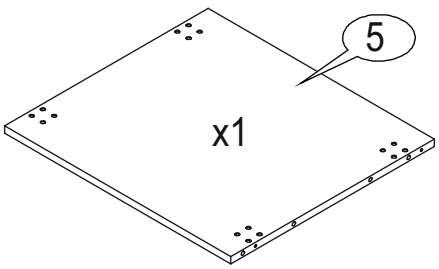

510 x (A - 33 mm)

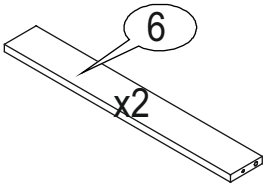

80 x (A - 33 mm)

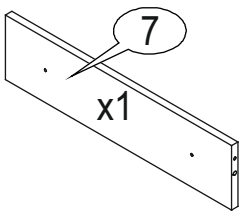

130 x (A - 33 mm)

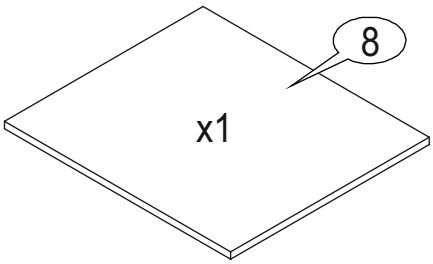

498 x (A - 33 mm)

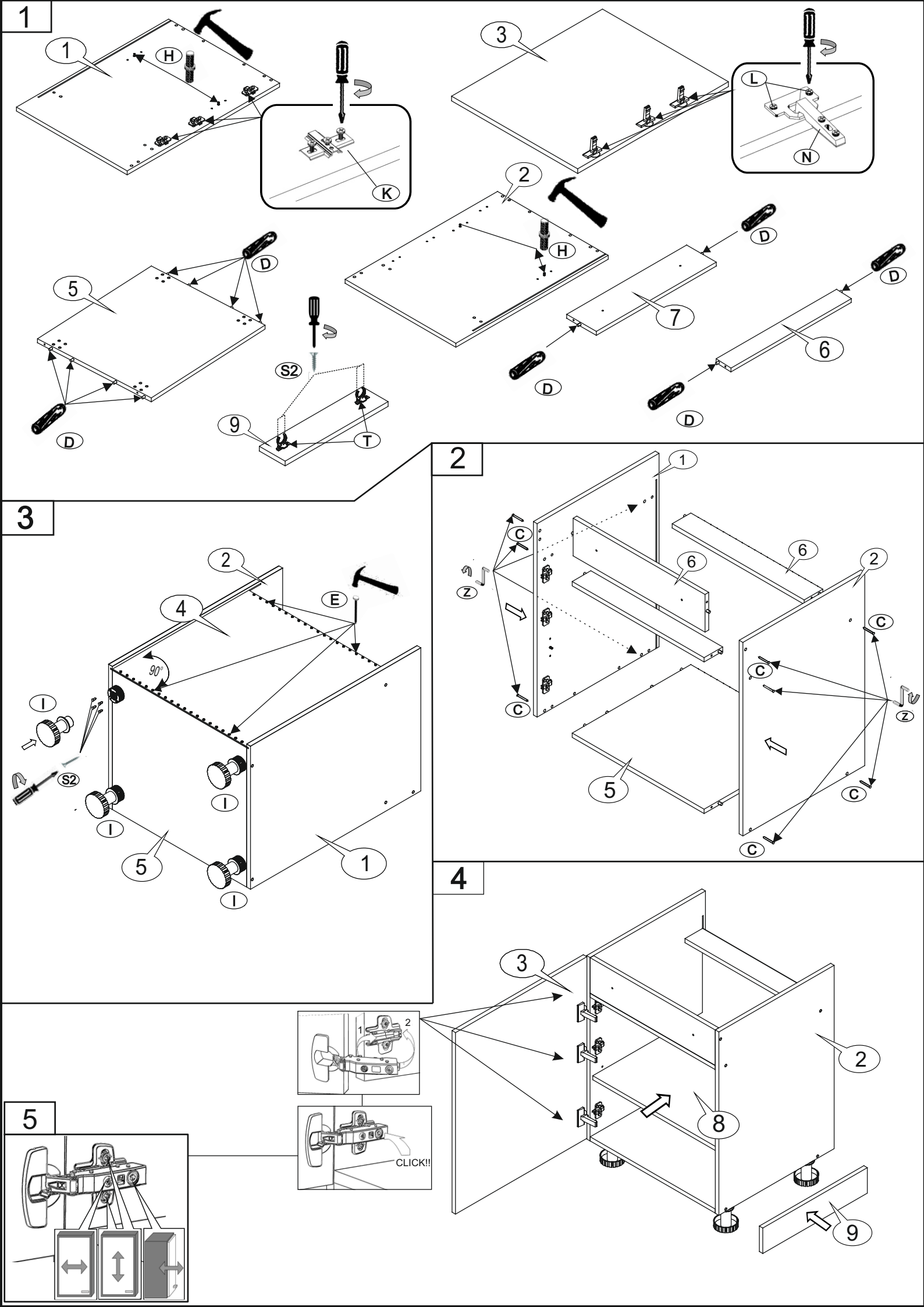
1
1
H
K
3
L
N
2
H
D
5
D
D
7
D
6
D
D
S2
9
T
2
1
C
6
6
2
Z
C
C
C
Z
5
C
C
3
2
4
E
90°
I
S2
I
I
I
5
1
4
3
2
8
9
1
2
CLICK!!
5

D60 PK MV /2133 P/L; D60 PK MV /2183 P/L

v.1

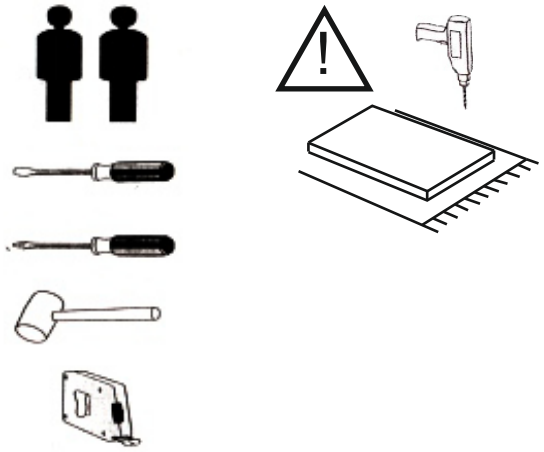

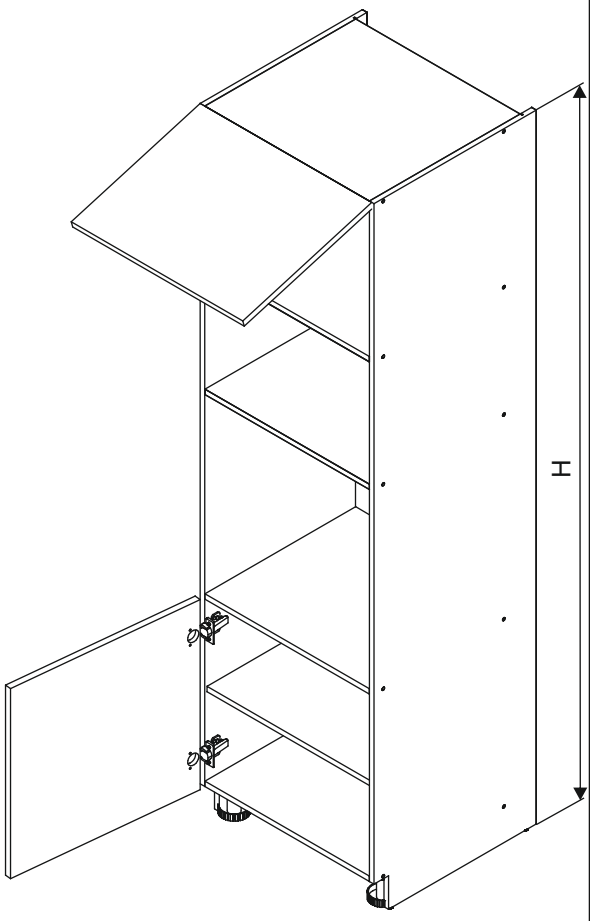

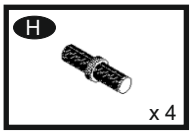

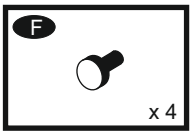

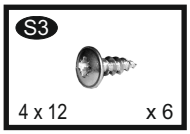

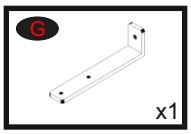

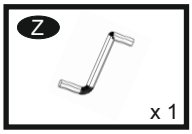

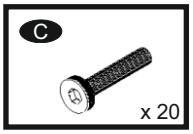

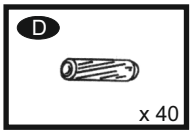

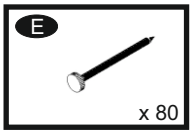

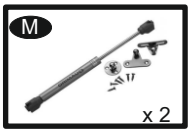

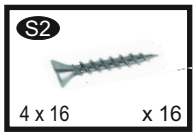

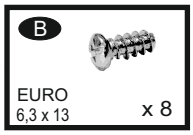

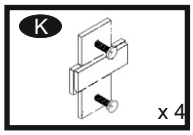

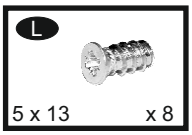

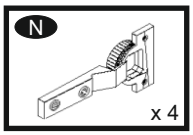

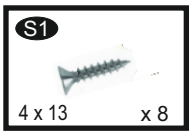

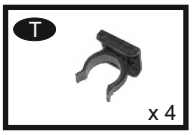

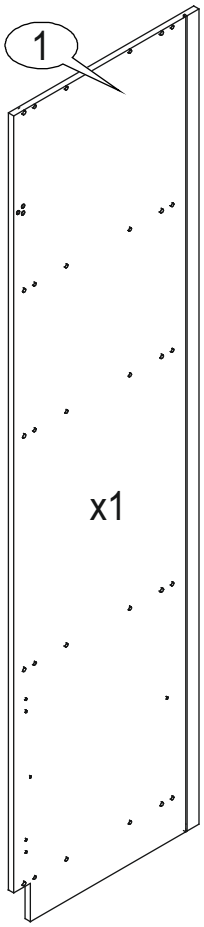

H x 560

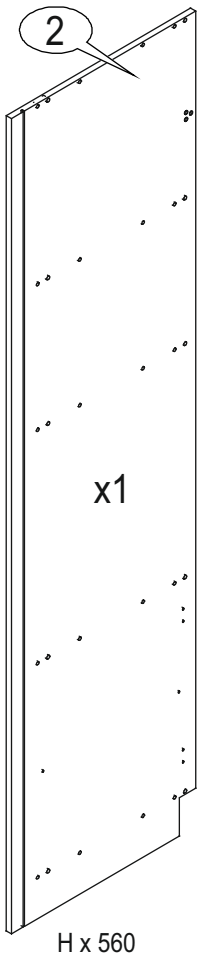

H x 560

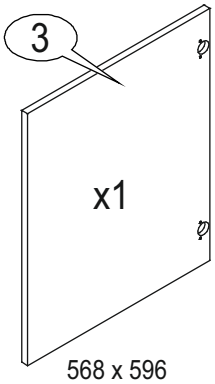

568 x 596

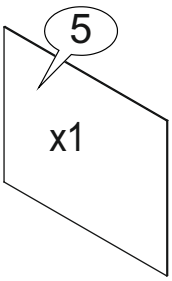

477 x 578

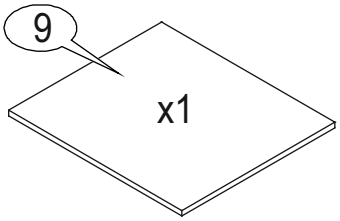

498 x 567

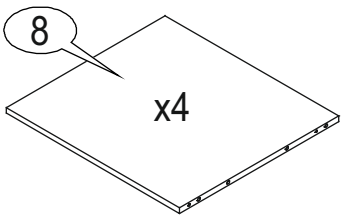

520 x 567

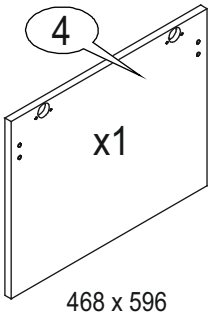

468 x 596

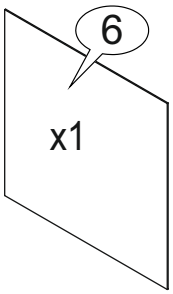

572 x 578

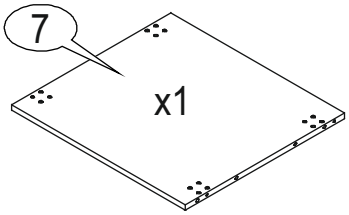

520 x 567

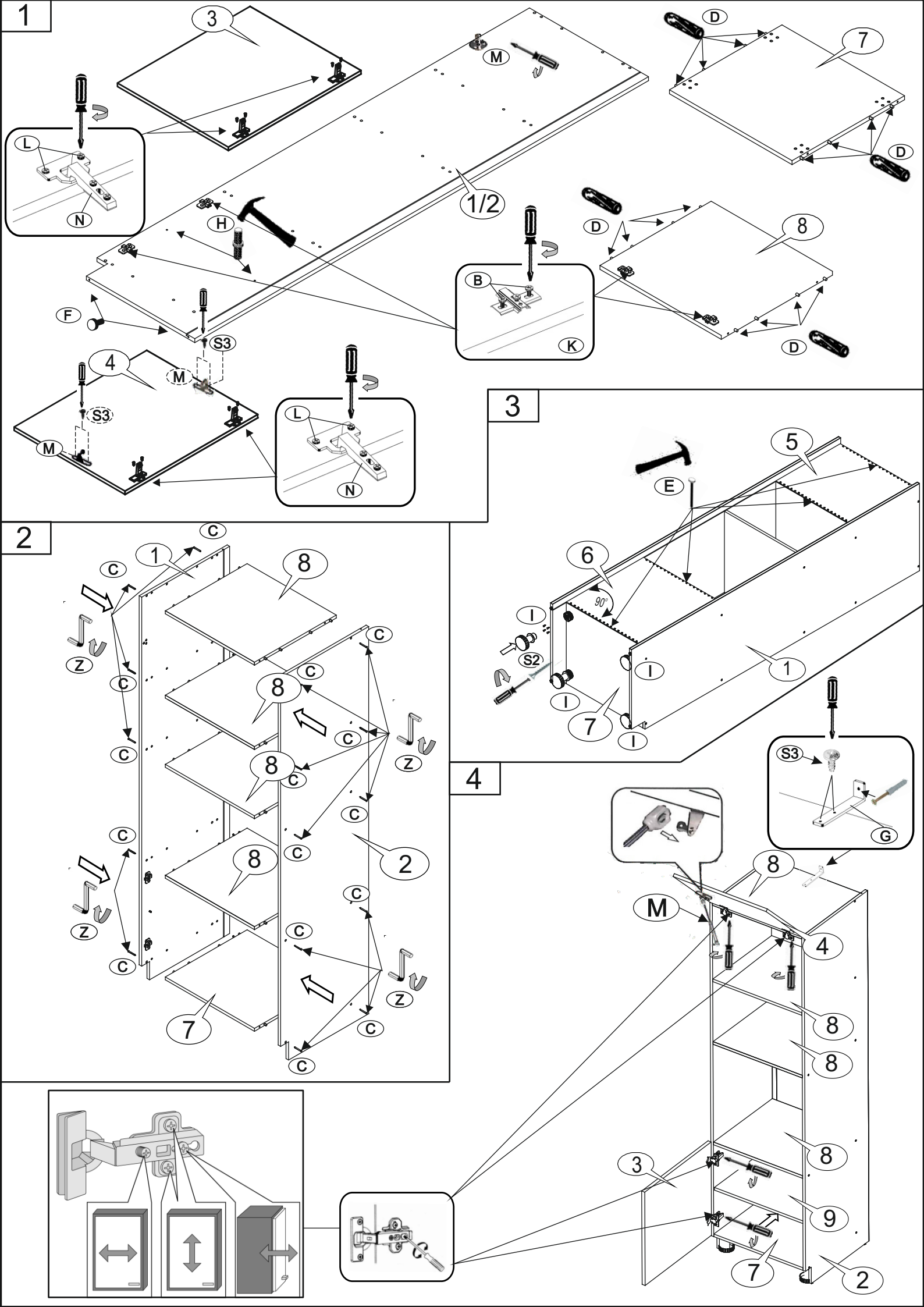
1
3
M
D
7
L
N
1/2
H
D
8
B
K
F
S3
4
M
S3
M
L
N
3
5
E
6
90°
I
S2
I
I
1
7
I
2
C
1
8
C
Z
C
C
8
C
C
Z
8
C
C
C
2
C
8
C
Z
C
C
Z
7
C
C
4
S3
G
8
M
4
8
8
8
3
9
7
2

W40GR F/2; W50GR F/2; W60GR F/2

v.1

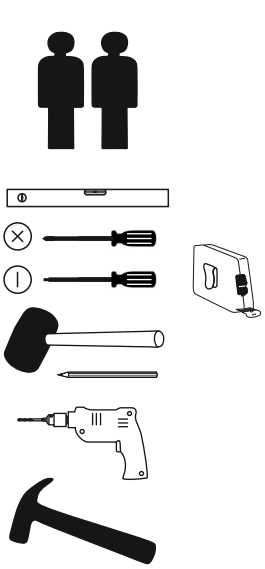

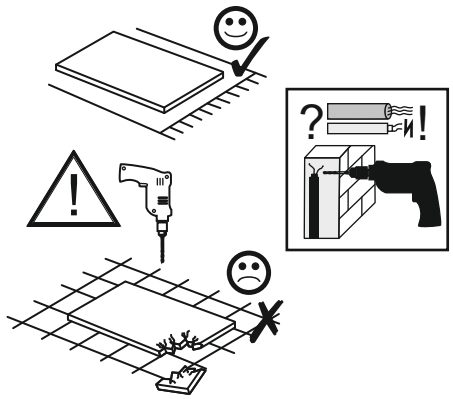

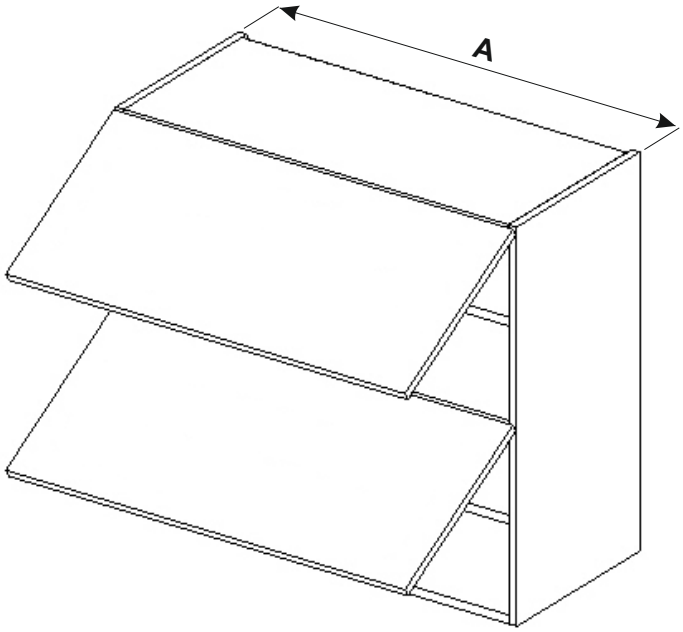

A 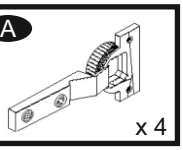 x 4	B x 4	C 5 x 13 x 8	D x 12	E x 12	F x 8	G 2,5 x 20 x 8	
O x 8	I 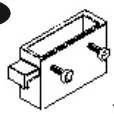 x 2	J x 2	K EURO 6,3 x 13 x 8	L 4 x 30 x 4	M	N x 2	

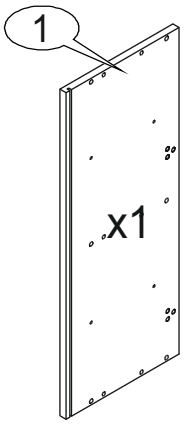

720 x 288

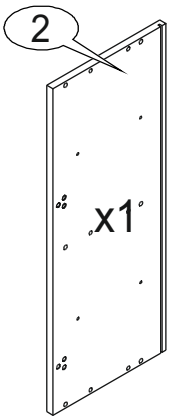

720 x 288

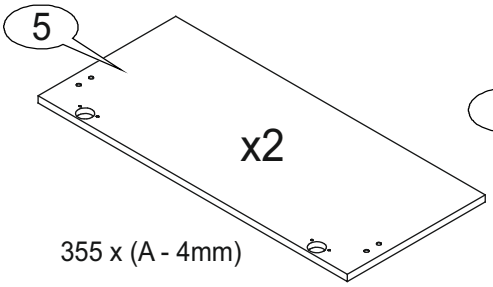

355 x (A - 4mm)

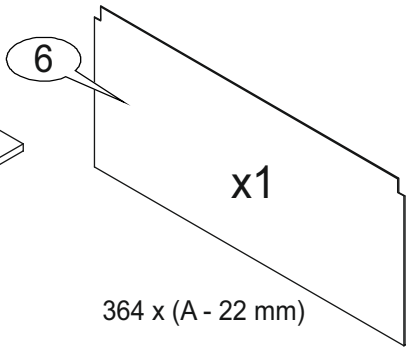

364 x (A - 22 mm)

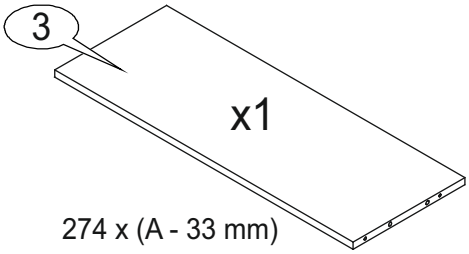

274 x (A - 33 mm)

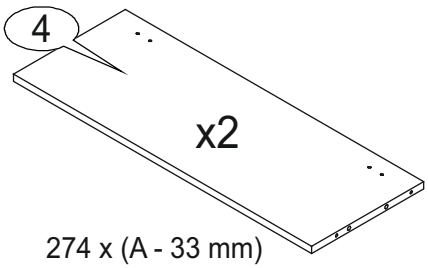

274 x (A - 33 mm)

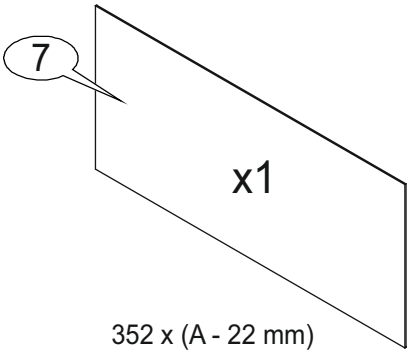

352 x (A - 22 mm)

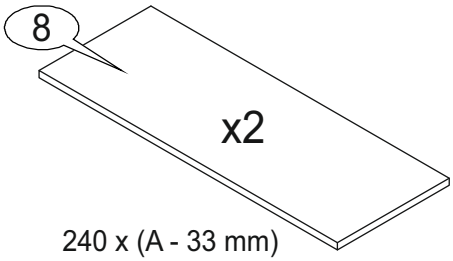

240 x (A - 33 mm)

1

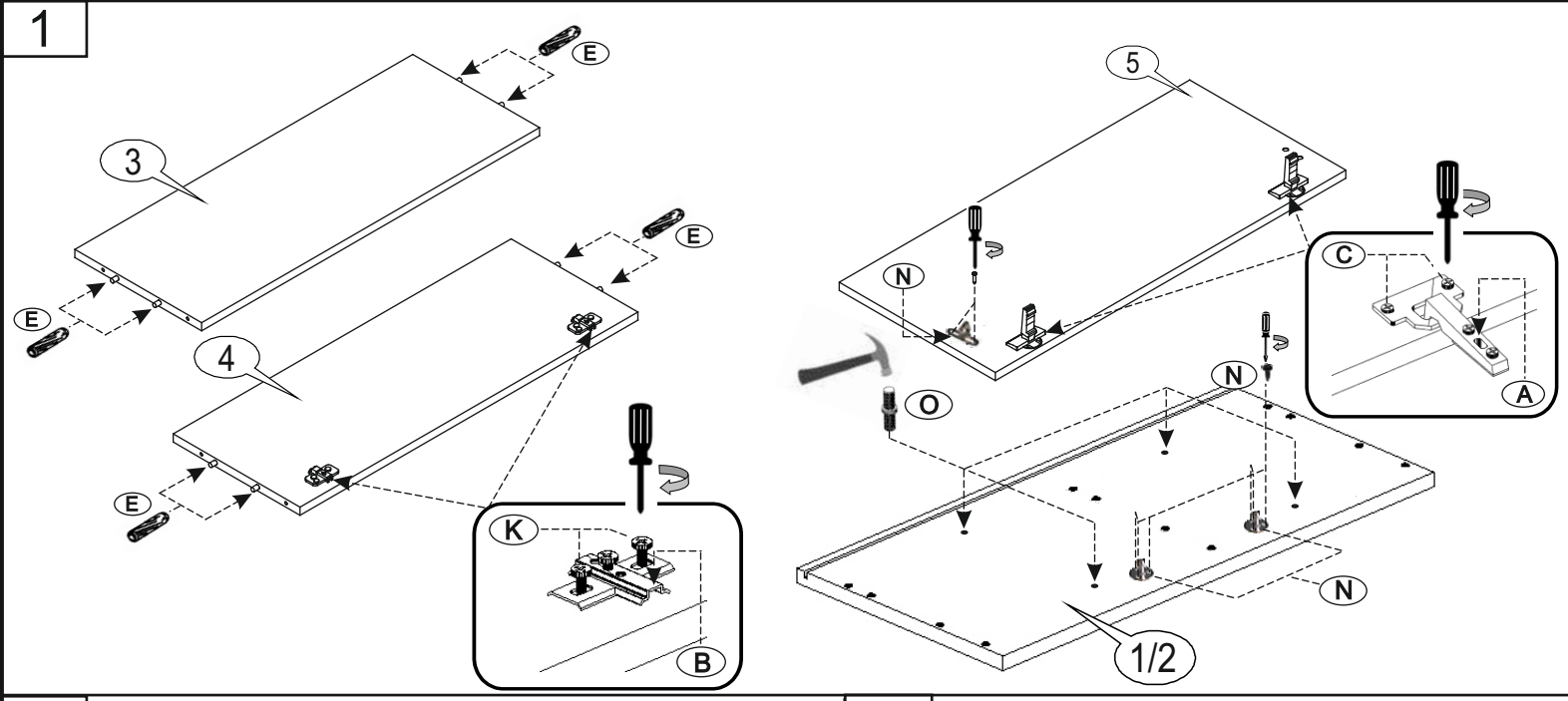
E
3
E
E
4
E
K
B
5
N
C
A
O
N
N
1/2

2

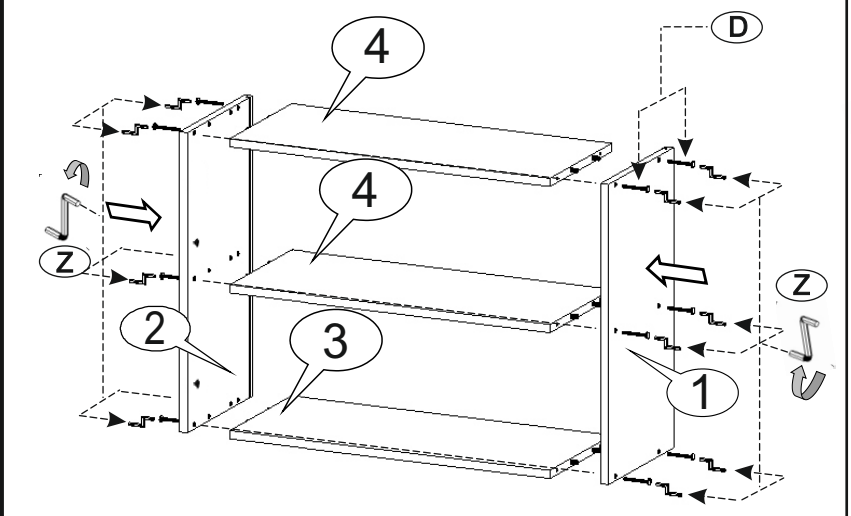
4
D
4
Z
2
3
1
Z

3

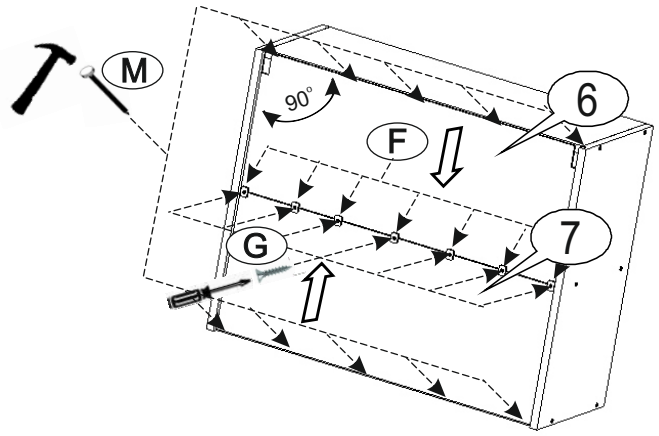
M
90°
6
F
G
7

4

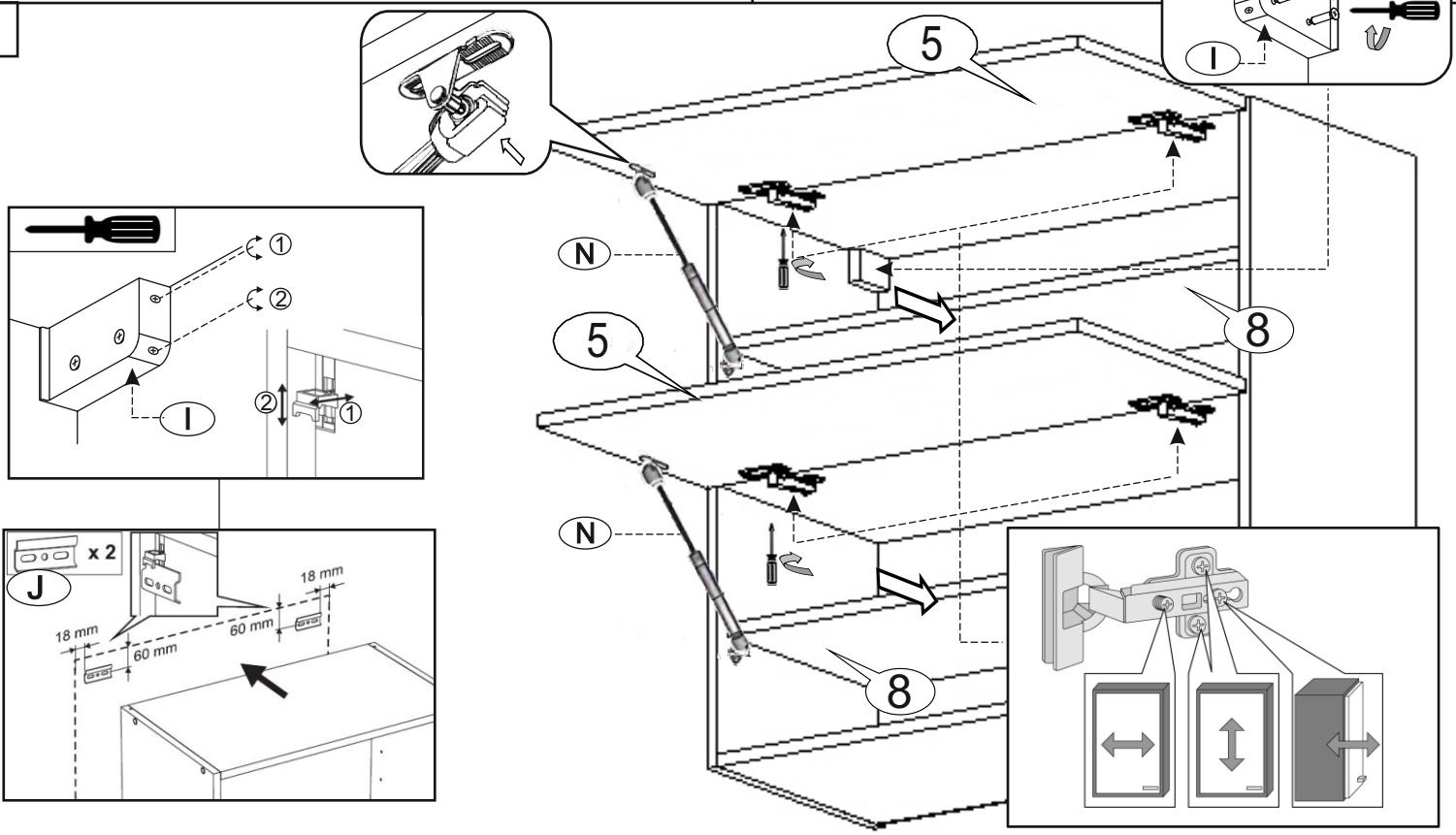
L
I
5
N
5
8
N
8
I
J
x 2
18 mm
60 mm
18 mm
60 mm

TL: W40 OK GR; W50 OK GR; W60 OK. GR

v.1

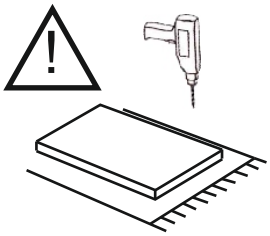

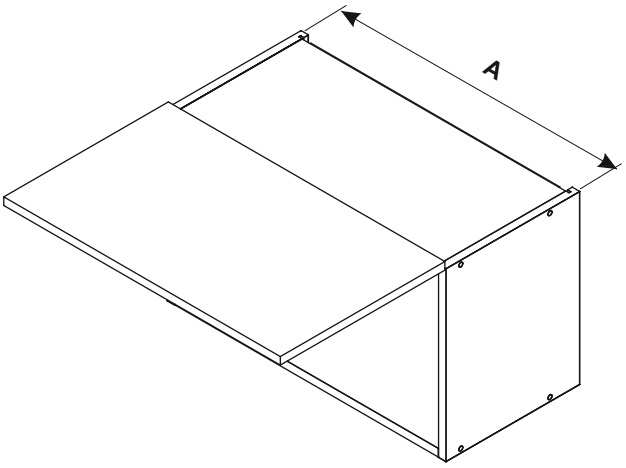

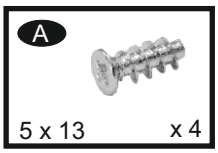

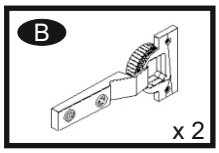

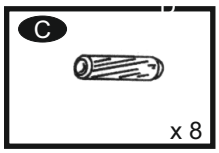

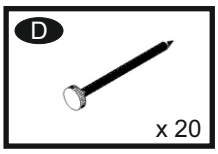

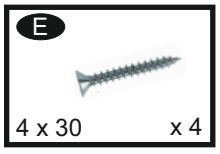

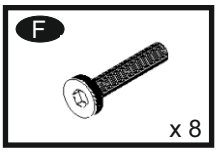

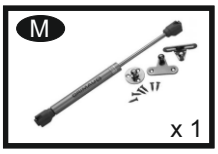

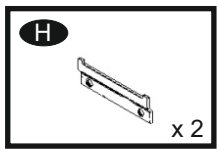

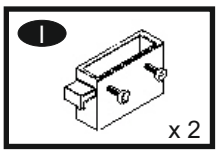

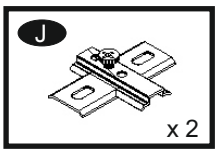

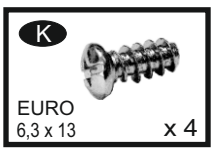

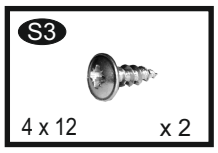

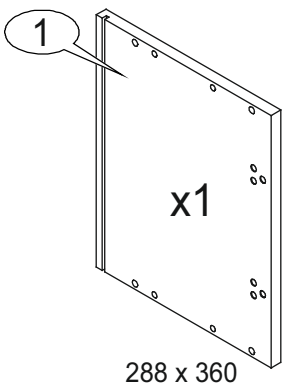

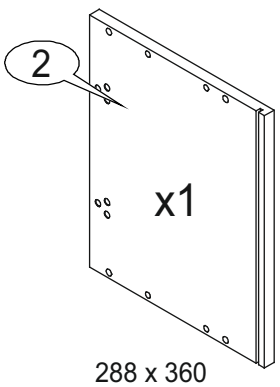

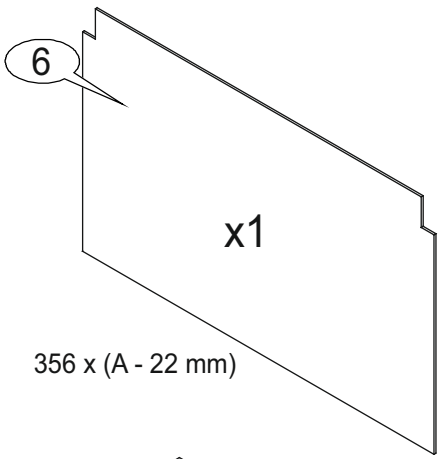

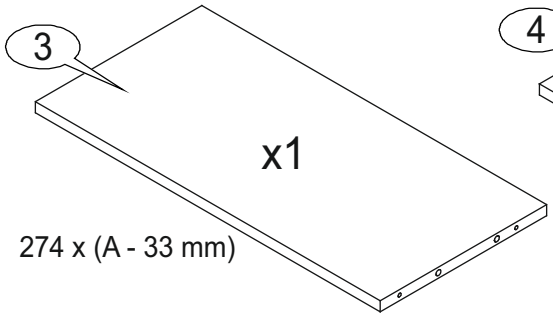

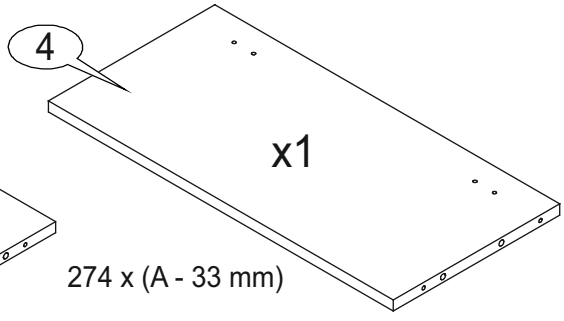

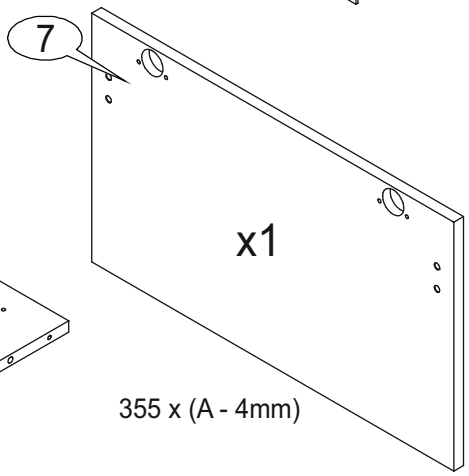

1

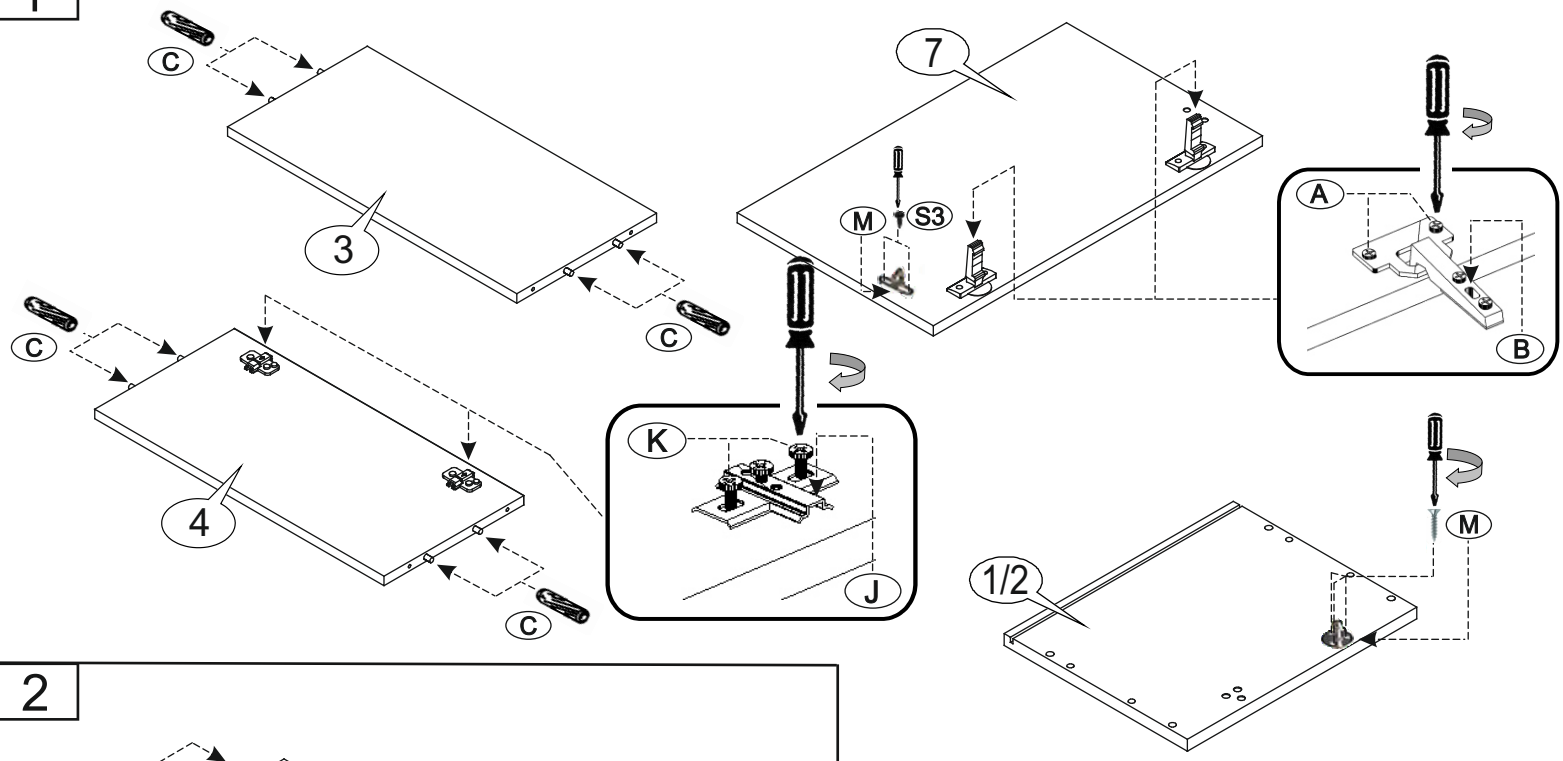
C
3
C
7
M
S3
A
B
C
4
C
K
J
1/2
M

2

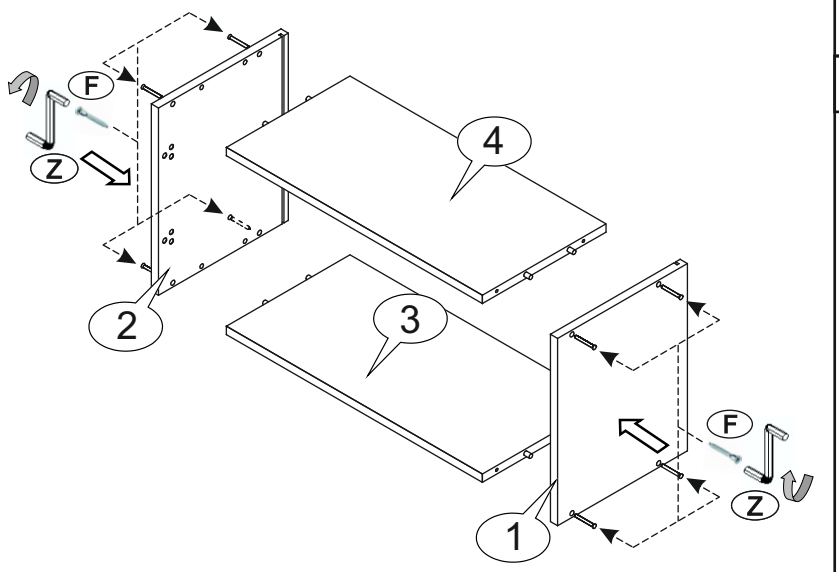
F
Z
4
2
3
F
Z
1

3

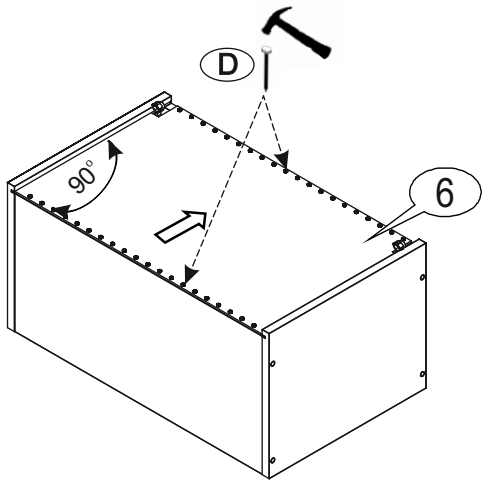
D
90°
6

4

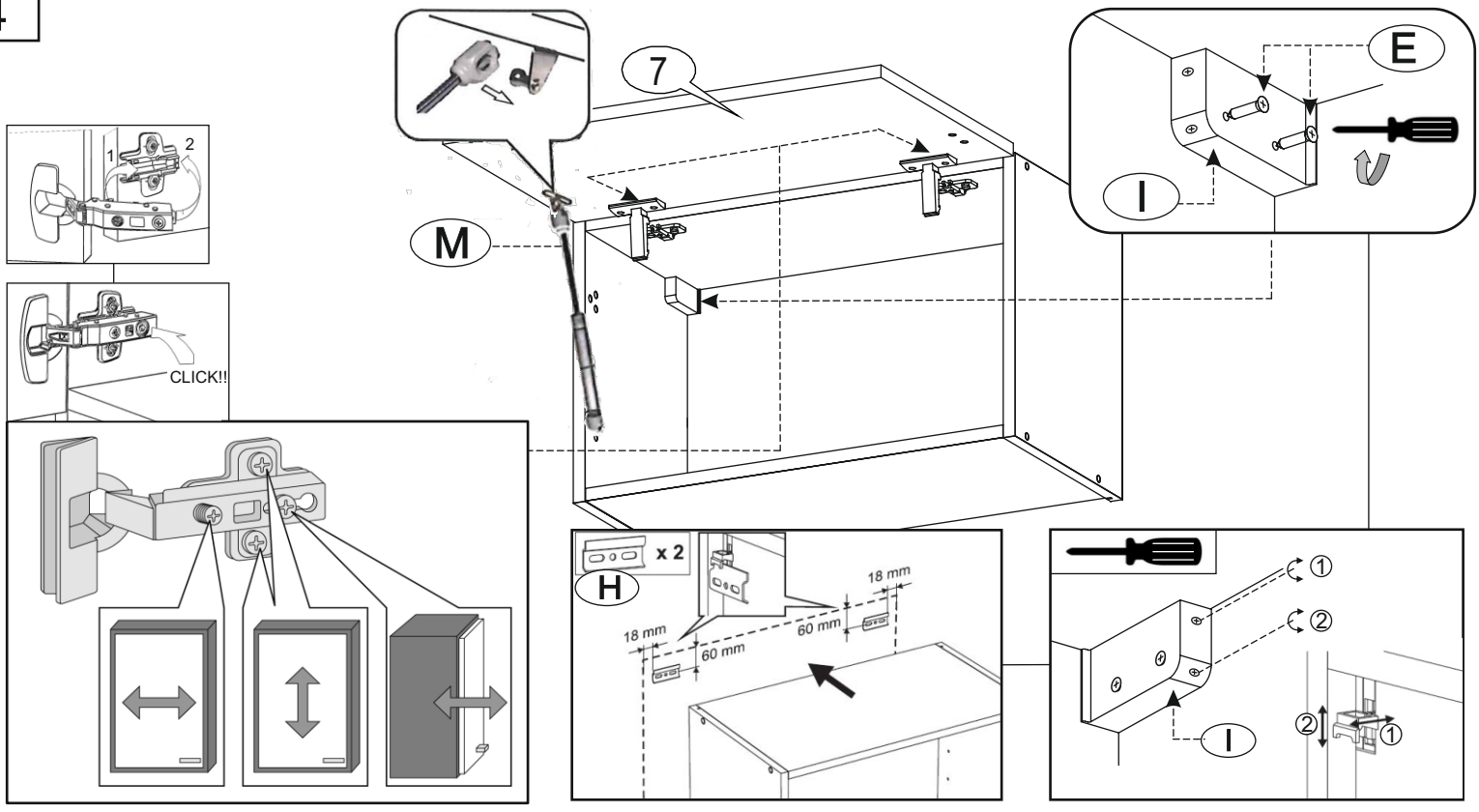
1
2
CLICK!!
7
M
E
I
H
x 2
18 mm
60 mm
18 mm
60 mm
I
①
②
②
①